US 20170084229A1

(19) United States

(12) Patent Application Publication

(10) Pub. No.: US 2017/0084229 A1

(43) Pub. Date: Mar. 23, 2017

Hirai et al.

(54) HIGH RESOLUTION OLED DISPLAY OPERATION CIRCUIT

(71) Applicant: **COMMONWEALTH SCIENTIFIC AND INDUSTRIAL RESEARCH ORGANISATION**, Acton, ACT (AU)

(72) Inventors: **Tadahiko Hirai**, Mount Waverly, Victoria (AU); **Kazunori Ueno**, Glen Waverly, Victoria (AU)

(73) Assignee: **COMMONWEALTH SCIENTIFIC AND INDUSTRIAL RESEARCH ORGANISATION**, Acton (AU)

(21) Appl. No.: **15/312,377**

(22) PCT Filed: **May 19, 2015**

(86) PCT No.: **PCT/AU2015/000295**

§ 371 (c)(1),
(2) Date: **Nov. 18, 2016**

(30) **Foreign Application Priority Data**

May 19, 2014 (AU) 2014901852

Publication Classification

(51) **Int. Cl.**
G09G 3/3283 (2006.01)
G09G 5/10 (2006.01)

(52) **U.S. Cl.**
CPC ***G09G 3/3283*** (2013.01); ***G09G 5/10*** (2013.01); *G09G 2300/043* (2013.01); *G09G 2300/0819* (2013.01); *G09G 2300/0842* (2013.01)

(57) **ABSTRACT**

A light-emitting display panel sub-pixel circuit, comprising: at least three switches; at least one capacitive element; at least one light-emitting element; a power line serving as a wire for connecting the at least three switches, the at least one capacitive element, and the at least one light-emitting element; an earth line; a scan line for selecting a sub-pixel for light emission; a data line for supplying data to the light-emitting element; and a sense line for detecting degradation of the light-emitting element, wherein the data corresponding to a predetermined luminous intensity are programmed on the basis of a voltage.

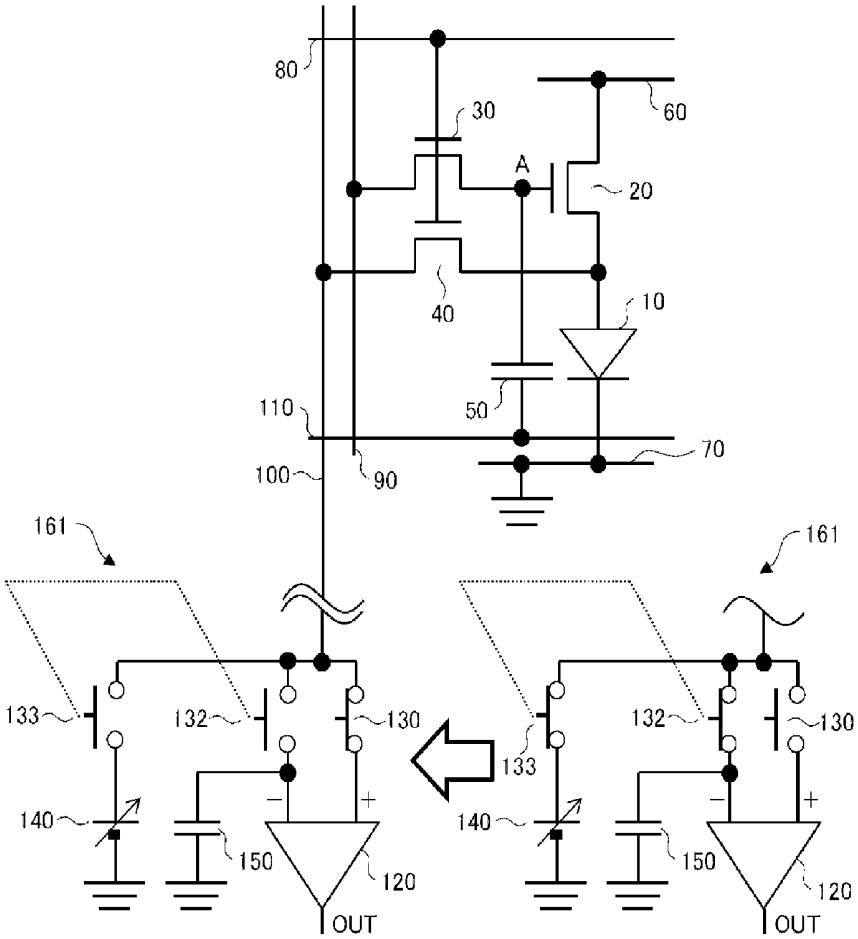

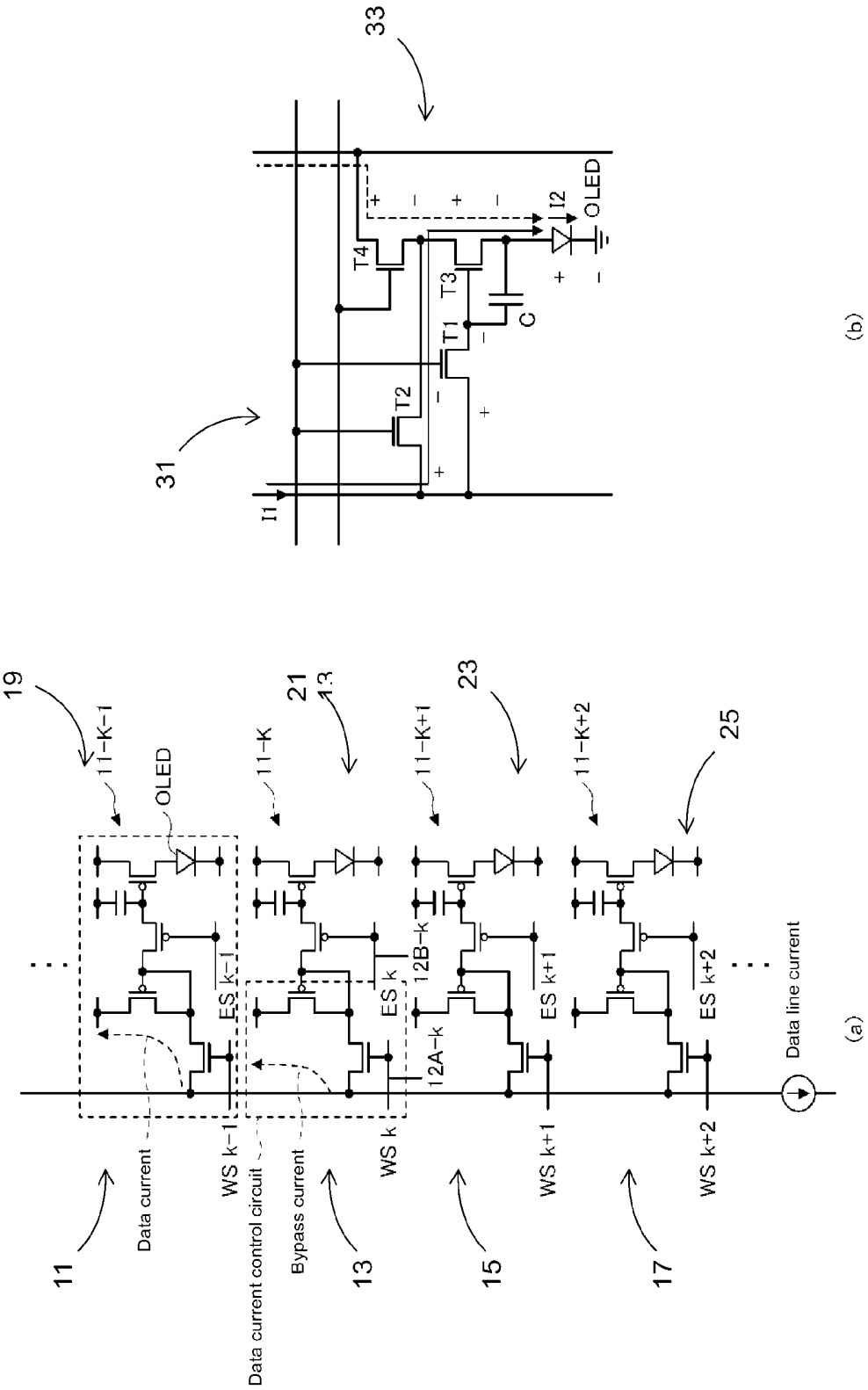
19
11-K-1
OLED
11-K
21
13
11-K+1
23
11-K+2
25
ES k-1
ES k
12B-k
ES k+1
ES k+2
12A-k
Data current
WS k-1
Data current control circuit
Bypass current
WS k
WS k+1
WS k+2
Data line current
11
13
15
17
(a)
33
31
I1
T2
T4
T1
T3
C
I2
OLED
(b)

Figure 1

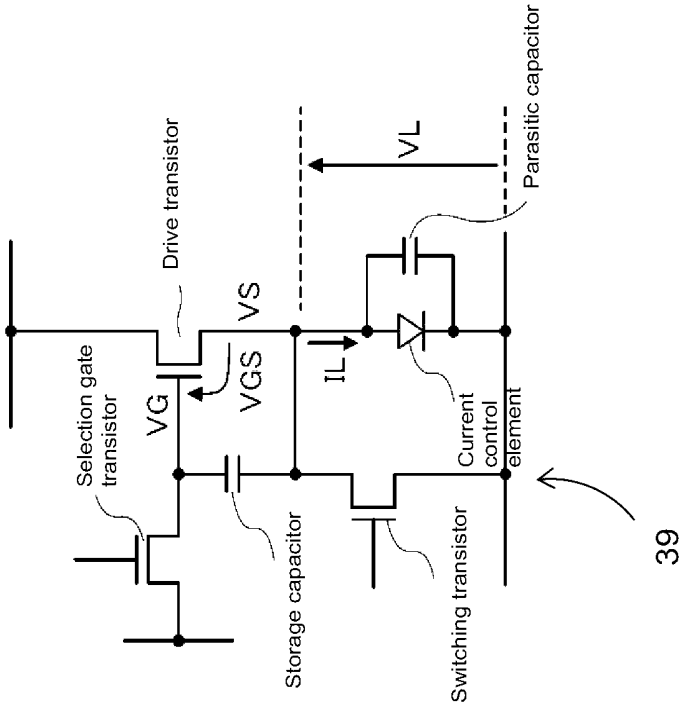
Selection gate transistor
Drive transistor
VG
VGS
VS
Storage capacitor
IL
VL
Switching transistor
Current control element
Parasitic capacitor
39

(b)

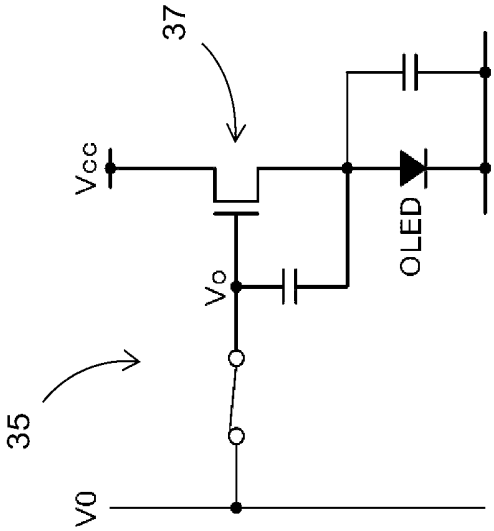
V0
35
Vo
Vcc
37
OLED

(a)

Figure 2

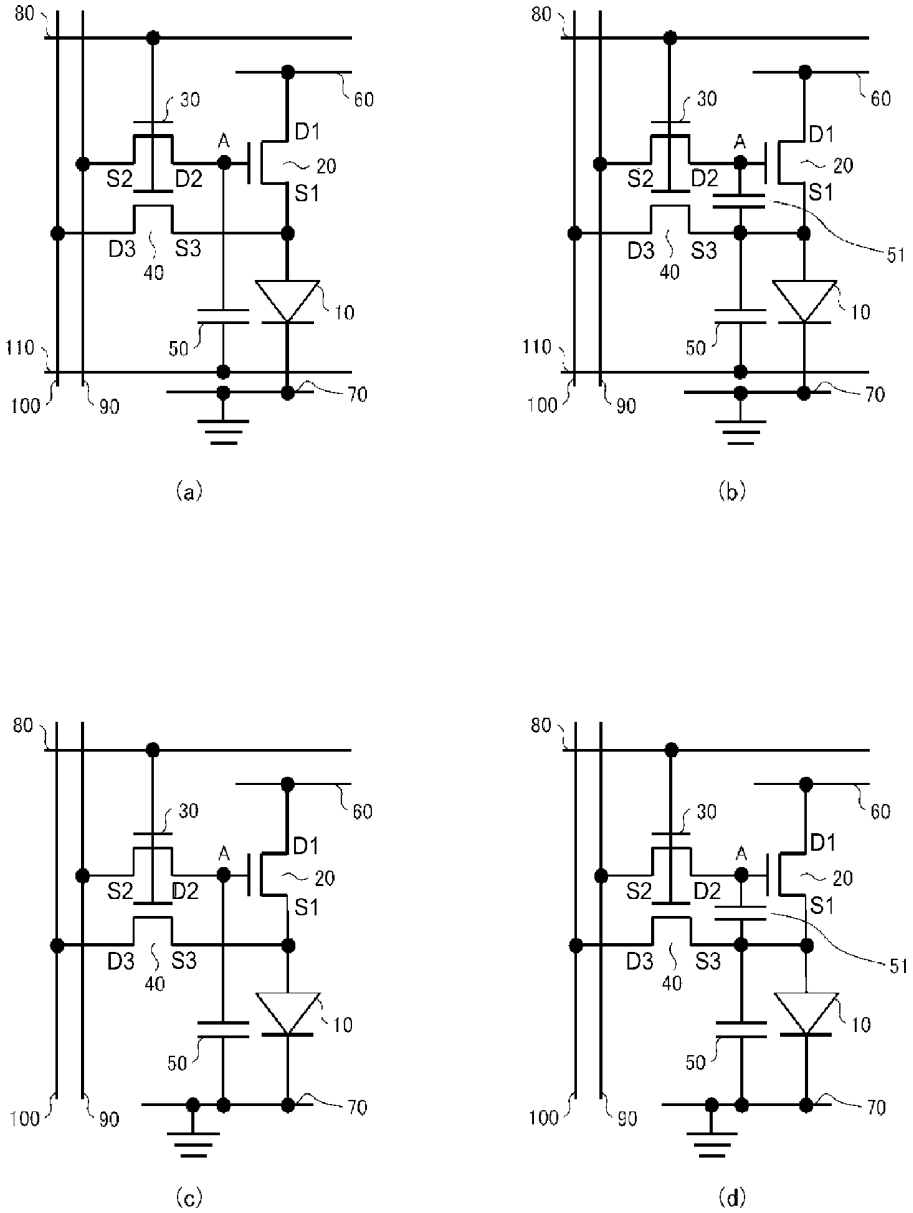

Figure 3

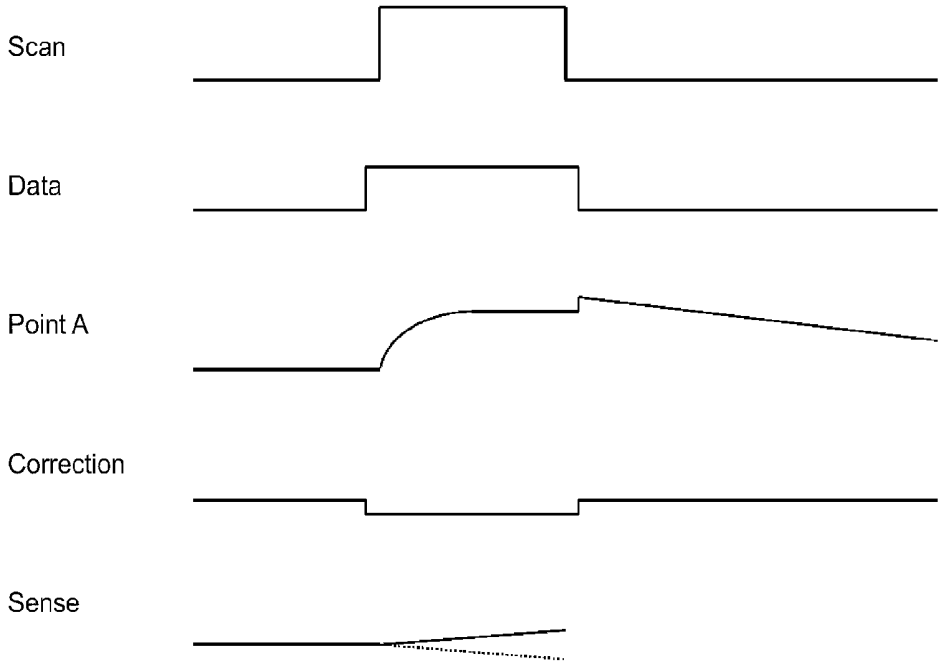

Figure 4

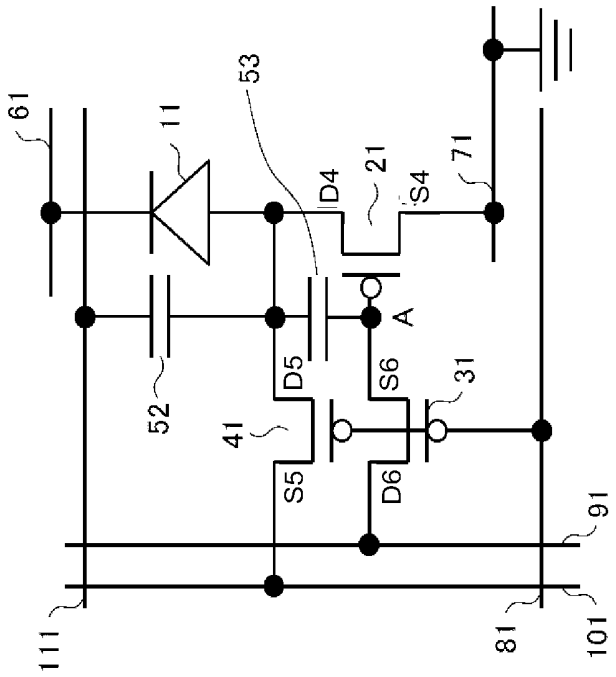
61
11
53
D4
21
S4
71
52
41
D5
S6
A
31
S5
D6
91
111
81
101

(b)

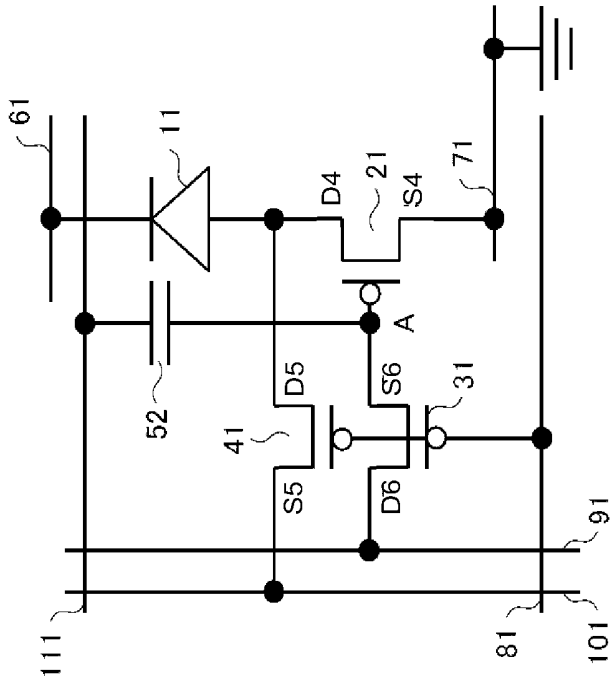
61
11
D4
21
S4
71
52
41
D5
S6
A
31
S5
D6
91
111
81
101

(a)

Figure 5

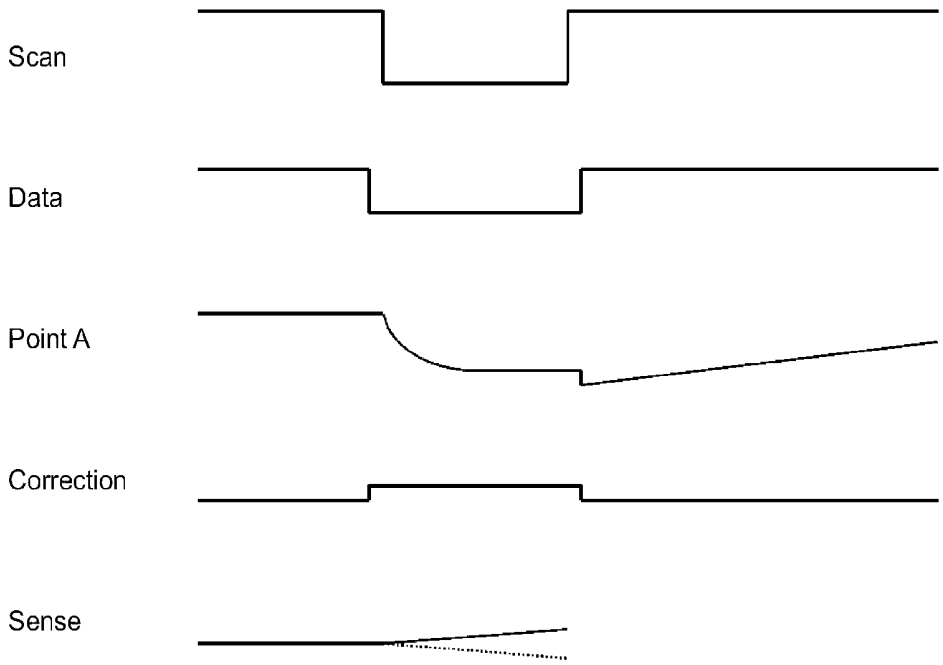

Figure 6

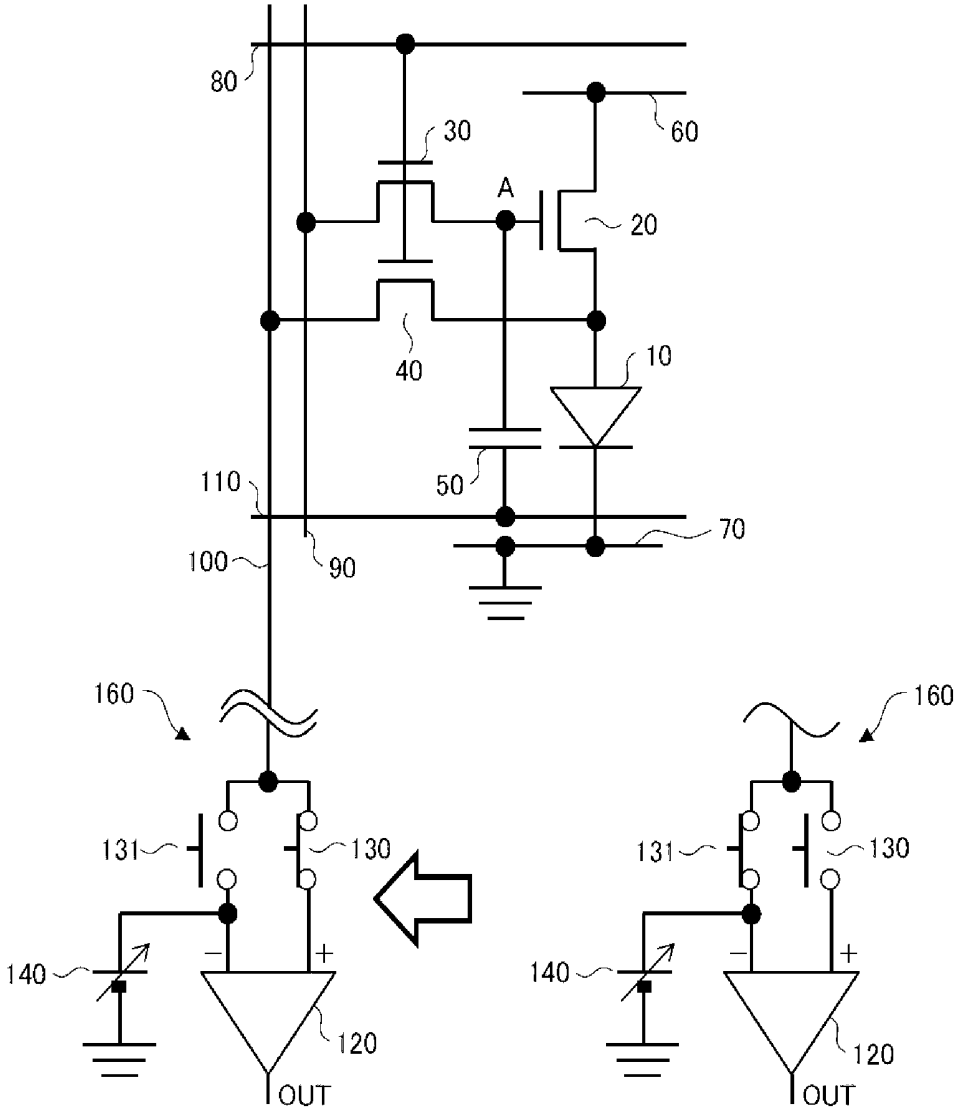
80
30
60
A
20
40
10
50
110
70
100
90
160
160
131
130
131
130
140
140
120
120
OUT
OUT

Figure 7

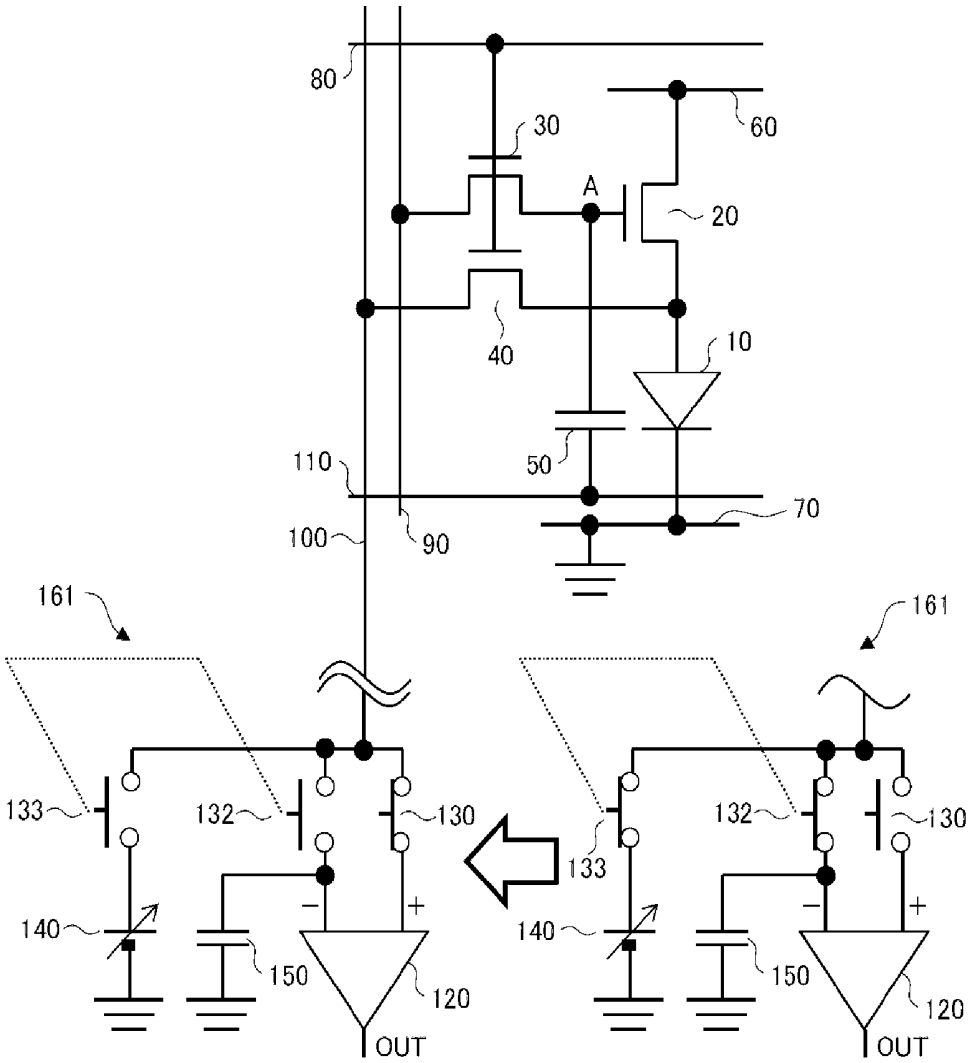
80
30
60
A
20
40
10
50
110
70
100
90
161
161
133
132
130
133
132
130
140
150
120
OUT
140
150
120
OUT

Figure 8

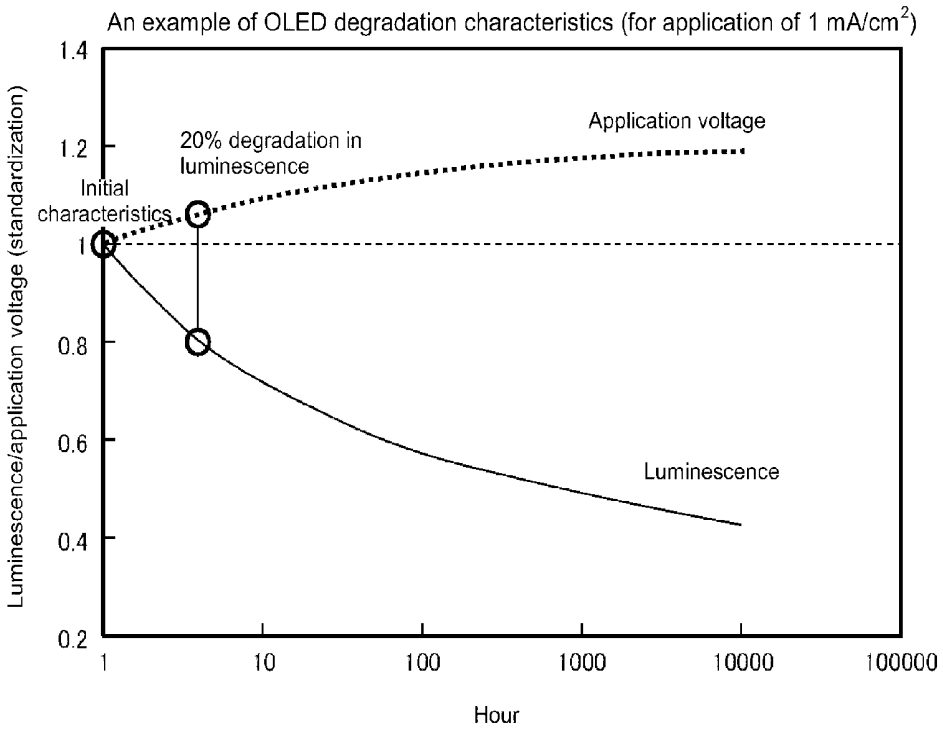
An example of OLED degradation characteristics (for application of 1 mA/cm2)
Luminescence/application voltage (standardization)
1.4
1.2
1
0.8
0.6
0.4
0.2
Application voltage
20% degradation in luminescence
Initial characteristics
Luminescence
1
10
100
1000
10000
100000
Hour

Figure 9

(a)

Bias [V]	Current [mA/cm²]	Luminescence [cd/m²]
3.0	0.000	0.7
3.1	0.000	1.1
3.2	0.000	1.4
3.3	0.001	1.4
3.4	0.001	0.0
3.5	0.001	2.0
3.6	0.002	1.6
3.7	0.003	6.8
3.8	0.005	7.1
3.9	0.007	10.0
4.0	0.011	14.8
4.1	0.016	20.0
4.2	0.023	27.1
4.3	0.032	39.6
4.4	0.045	53.0
4.5	0.062	72.8
4.6	0.085	99.2
4.7	0.113	129.4
4.8	0.148	167.6
4.9	0.189	212.0
5.0	0.237	262.7
5.1	0.291	320.2
5.2	0.352	384.6
5.3	0.421	454.9
5.4	0.498	534.5
5.5	0.585	618.4
5.6	0.682	714.6
5.7	0.792	819.0
5.8	0.915	935.2
5.9	1.054	1065.0
6.0	1.208	1209.0
6.1	1.380	1366.0
6.2	1.572	1537.0
6.3	1.785	1722.0
6.4	2.021	1927.0
6.5	2.282	2148.0
6.6	2.571	2388.0
6.7	2.890	2648.0
6.8	3.241	2928.0
6.9	3.627	3231.0
7.0	4.051	3554.0
7.1	4.514	3905.0
7.2	5.022	4274.0
7.3	5.577	4672.0
7.4	6.181	5097.0
7.5	6.839	5546.0
7.6	7.556	6028.0
7.7	8.335	6537.0
7.8	9.179	7074.0
7.9	10.097	7646.0
8.0	11.092	8248.0
8.1	12.171	8888.0
8.2	13.337	9553.0
8.3	14.599	10260.0
8.4	15.963	11000.0
8.5	17.437	11780.0
8.6	19.030	12580.0
8.7	20.750	13490.0
8.8	22.672	14370.0
8.9	24.665	15300.0
9.0	26.821	16280.0

(b)

Vg [V]	Id [A]	Id [mA/cm²]	Model
0	0.00E-00	0.00E+00	1.55E-03
0.01	1.00E-11	1.43E-03	0.00E-00
0.02	2.00E-11	2.86E-03	1.55E-03
0.03	3.00E-11	4.29E-03	6.20E-03
0.04	4.00E-11	5.71E-03	1.40E-02
0.05	5.00E-11	7.14E-03	2.48E-02
0.06	6.00E-11	8.57E-03	3.88E-02
0.07	7.00E-11	1.00E-02	5.58E-02
0.08	8.00E-11	1.14E-02	7.60E-02
0.09	9.00E-11	1.29E-02	9.92E-02
0.1	1.00E-10	1.43E-02	1.26E-01
0.11	5.02E-09	7.17E-01	1.55E-01
0.12	5.05E-09	7.22E-01	1.88E-01
0.13	5.11E-09	7.30E-01	2.23E-01
0.14	5.19E-09	7.42E-01	2.62E-01
0.15	5.30E-09	7.56E-01	3.04E-01
0.16	5.42E-09	7.74E-01	3.49E-01
0.17	5.57E-09	7.96E-01	3.97E-01
0.18	5.74E-09	8.21E-01	4.48E-01
0.19	5.94E-09	8.48E-01	5.02E-01
0.2	6.16E-09	8.80E-01	5.60E-01
0.21	6.40E-09	9.14E-01	6.20E-01
0.22	6.66E-09	9.52E-01	6.84E-01
0.23	6.95E-09	9.93E-01	7.50E-01
0.24	7.26E-09	1.04E+00	8.20E-01
0.25	7.60E-09	1.09E+00	8.93E-01
0.26	7.95E-09	1.14E+00	9.69E-01
0.27	8.33E-09	1.19E+00	1.05E-00
0.28	8.74E-09	1.25E+00	1.13E-00
0.29	9.16E-09	1.31E+00	1.22E-00
0.3	9.61E-09	1.37E+00	1.30E-00
0.31	1.01E-08	1.44E+00	1.40E-00
0.32	1.06E-08	1.51E+00	1.49E-00
0.33	1.11E-08	1.59E+00	1.59E-00
0.34	1.16E-08	1.66E+00	1.69E-00
0.35	1.22E-08	1.74E+00	1.79E-00
0.36	1.28E-08	1.83E+00	1.90E-00
0.37	1.34E-08	1.91E+00	2.01E-00
0.38	1.40E-08	2.00E+00	2.12E-00
0.39	1.47E-08	2.10E+00	2.24E-00
0.4	1.54E-08	2.20E+00	2.36E-00
0.41	1.61E-08	2.30E+00	2.48E-00
0.42	1.68E-08	2.40E+00	2.61E-00
0.43	1.75E-08	2.51E+00	2.73E-00
0.44	1.83E-08	2.62E+00	2.87E-00
0.45	1.91E-08	2.73E+00	3.00E-00
0.46	1.99E-08	2.85E+00	3.14E-00
0.47	2.08E-08	2.97E+00	3.28E-00
0.48	2.16E-08	3.09E+00	3.42E-00
0.49	2.25E-08	3.22E+00	3.57E-00
0.5	2.34E-08	3.35E+00	3.72E-00

Figure 10

HIGH RESOLUTION OLED DISPLAY OPERATION CIRCUIT

TECHNICAL FIELD

[0001] The present invention relates to a light-emitting display panel sub-pixel circuit employing an organic electroluminescence element such as organic light-emitting diode (OLED) or organic EL, a drive method therefore, and a display panel/unit using the sub-pixel circuit.

BACKGROUND ART

[0002] Display panels using a two-terminal display device that emits light at luminous intensity corresponding to a direct current level, such as an organic electroluminescence element or organic light-emitting diode (OLED); namely, devices employing organic electro luminescence (EL), have recently been developed.

[0003] Implementation of a high-luminance, high-contrast image display requires an active drive through the use of a switching element or, for example, a thin film transistor (TFT). Typically, the OLED is a light-emitting device that has a laminated structure of a thin organic material and varies emission intensity according to the level of an electric current. A display unit that displays an image can be configured by using TFTs to pass an electric current through an OLED provided on each of pixels or sub-pixels disposed on a matrix and thereby allow the pixel or sub-pixel to emit light.

[0004] In active matrix drive OLEDs, many light-emitting regions called pixels are typically arranged in a matrix form, where their lines are scanned one by one for repeated writing (programming) operation for luminescence or colour tone. One pixel is typically composed of a plurality of sub-pixels having different colour tones, in which the luminescence and colour tone of the pixel is controlled through the control of a combination of luminescence for each sub-pixel.

[0005] A sub-pixel is connected to a plurality of matrix wires and is composed of a plurality of switching elements, light-emitting elements, and capacitive elements (capacitors). Various drive methods have been proposed to correct the variation in characteristics of the switching elements and light-emitting elements as well as changes in characteristics caused by the degradation.

[0006] FIG. **1** is a diagram showing an exemplary configuration of a current program method in a sub-pixel circuit using an OLED and its drive method. FIG. **1**(*a*) is a diagram showing an example application of a current mirror circuit array to a sub-pixel circuit array (see, for example, PTL 1), in which a mirror transistor forming part of current mirror circuits **11** to **17** is programmed to cause a predetermined level of current to flow therethrough so as to cause a current proportional to it to flow through an OLED forming part of sub-pixel circuits **19** to **25**. FIG. **1**(*b*) is a diagram of a current mirror circuit **31** and a sub-pixel circuit **33** in which data (current) to be programmed is passed through the OLED and the current itself flowing through the OLED is thereby programmed (see, for example, Non Patent Literature NPL 1). The drive method of this circuit by current programming tends to result in an increase in the number of switching elements per sub-pixel, although it has an advantage of providing precise control of an electric current flowing through the OLED. Also, the method is not adequate for implementing a high-definition display having a small pixel area and high-speed scanning, since current programming is time consuming.

[0007] FIG. **2** is a diagram showing an exemplary configuration of a voltage program method in a sub-pixel circuit using an OLED and its drive method. FIG. **2**(*a*) is a diagram showing an example of a drive circuit **35** which includes a threshold correction circuit which applies a threshold correction function for a switching element (see, for example, PTL 2). FIG. **2**(*b*) is a diagram showing an example of a voltage control circuit **39** mitigating degradation of an OLED through the release and resetting of a voltage applied to an OLED (see, for example, PTL 3). The voltage program method applied by the voltage control circuit **39** has an advantage of implementing high-speed scanning as well as reducing the number of switching elements per pixel. In contrast, the voltage program method has difficulty in correcting switching element threshold variation and OLED degradation simultaneously.

[0008] There has recently been increasing demand for higher definition and higher-speed scanning. In order to satisfy this demand, it would be desirable to provide display units that employ various means and their drive methods should be offered.

[0009] OLED display units designed for use in mobile devices which have recently been gaining attention require high definition ranging from 300 ppi (pixel per inch) up to 400 ppi. A high-definition OLED display unit of 400 ppi, for example, has one pixel of 60 micron square size. Also, 60 frames/sec or higher speed scanning is required in order to implement smoother motion picture display, making it very difficult to reduce the number of switching elements per pixel and at the same time provide an effective correction. There is a currently known technology for incorporating a threshold variation correction for switching elements into a voltage program drive method, but the technology is not sufficiently satisfactory to ensure variation correction and long-term reliability.

[0010] It would be desirable to provide a light-emitting display panel sub-pixel circuit, its drive method, and a display panel/unit using the sub-pixel circuit and its drive method.

SUMMARY

[0011] One aspect of the invention provides a light-emitting display panel sub-pixel circuit according to one embodiment of the present invention including at least three switches, at least one capacitive element, at least one light-emitting element, a power line connecting the at least three switches, the at least one capacitive element and the at least one light-emitting element, an earth line, a scan line for selecting a sub-pixel for light emission, a data line for supplying data to the light-emitting element, and a sense line for detecting degradation of the light-emitting element, wherein the data corresponding to a predetermined luminous intensity are programmed on the basis of a voltage.

[0012] Another aspect of the invention provides a sub-pixel drive method for a light-emitting display panel wherein, in the light-emitting display panel sub-pixel circuit, the sense line is pre-charged at a predetermined pre-charge voltage, and a voltage variation of the sense line is detected at the time of the activation of the sense transistor associated with the selection of a sub-pixel.

[0013] Another aspect of the invention provides a display panel wherein a plurality of sub-pixels including a sub-pixel circuit for the light-emitting display panel is disposed in a matrix.

[0014] Another aspect of the invention provides a display unit including a display panel.

[0015] One or more embodiments of the invention can implement a sub-pixel circuit, its drive method, and a display panel/unit using such a sub-pixel circuit and its drive method, which is high-definition and capable of high-speed scanning and correcting variation in switching transistor characteristics as well as light-emitting element (OLED) degradation.

BRIEF DESCRIPTION OF DRAWINGS

[0016] FIG. **1** is a diagram showing an example configuration of a current program method in a sub-pixel circuit using a conventional OLED and its drive method. FIG. **1**(*a*) is a diagram showing an example application of a current mirror circuit array to a sub-pixel circuit array. FIG. **1**(*b*) is a diagram of a current mirror circuit and a sub-pixel circuit in which data (current) to be programmed is passed through the OLED and the current itself flowing through the OLED is thereby programmed.

[0017] FIG. **2** is a diagram showing an exemplary configuration of a voltage program method in a sub-pixel circuit using a conventional OLED and its drive method. FIG. **2**(*a*) is a diagram showing an example of a drive circuit which includes a threshold correction circuit which applies a threshold correction function for a switching element. FIG. **2**(*b*) is a diagram showing an example of voltage control circuit mitigating OLED degradation.

[0018] FIG. **3** is a diagram showing an example configuration of a sub-pixel circuit using an OLED including a compensating circuit according to an embodiment of the present invention. FIG. **3**(*a*) is a diagram showing a first example configuration of a sub-pixel circuit. FIG. **3**(*b*) is a diagram showing a second example configuration of a sub-pixel circuit. FIG. **3**(*c*) is a diagram showing a third example configuration of a sub-pixel circuit. FIG. **3**(*d*) is a diagram showing a fourth example configuration of a sub-pixel circuit.

[0019] FIG. **4** is a schematic diagram showing an example of signal waveforms of a sub-pixel circuit using an OLED.

[0020] FIG. **5** is a diagram showing an example configuration of a sub-pixel circuit using an OLED including a compensating circuit according to an embodiment of the present invention. FIG. **5**(*a*) is a diagram showing a first example configuration of a sub-pixel circuit. FIG. **5**(*b*) is a diagram showing a second example configuration of a sub-pixel circuit.

[0021] FIG. **6** is a schematic diagram showing an example of signal waveforms of a sub-pixel circuit using an OLED.

[0022] FIG. **7** is a diagram of an example of a sub-pixel circuit configuration using an OLED, which shows operation of a compensating circuit.

[0023] FIG. **8** is a diagram of an example of a sub-pixel circuit configuration using an OLED, which shows operation of a compensating circuit.

[0024] FIG. **9** is a graph showing OLED degradation characteristics.

[0025] FIG. **10** is an example of a look-up table and a mathematical model used in compensation operation. FIG. **10**(*a*) is a look-up table showing OLED characteristics. FIG. **10**(*b*) is a look-up table showing drive TFT characteristics and a mathematical model.

DETAILED DESCRIPTION OF THE DRAWINGS

[0026] Embodiments according to the present invention will be described below with reference to the attached drawings. Through the drawings, reference numbers are re-used to indicate correspondence between referenced embodiments.

First Embodiment

[0027] FIG. **3** is a diagram showing a sub-pixel circuit of a light-emitting display unit according to a first embodiment of the present invention. In the first embodiment, one sub-pixel is composed of three n-channel TFTs **20**, **30**, **40**, one or two capacitive elements (capacitors) **50**, and one OLED **10**, which are connected to a scan line **80**, a data line **90**, a power line **60**, a correction line **110**, and an earth line **70**.

[0028] FIG. **4** is a schematic diagram showing a voltage application in a sub-pixel circuit of FIG. **3** as time passes. "Point A" of FIG. **4** corresponds to point A in a wire connected to a gate of the drive TFT **20** of FIG. **3**, showing a gate voltage of the drive TFT **20** as time passes.

[0029] In FIG. **3**(*a*), a drain D**1** of a drive TFT **20** is connected to the power line **60**, and a source S**1** is connected to an anode of the OLED **10**. A cathode of the OLED **10** is connected to the earth line **70**. A gate of the drive TFT **20** is connected to one electrode of the capacitive element **50** and a drain D**2** of the selection TFT **30**. A gate of the selection TFT **30** is connected to the scan line **80** and the source S**2** is connected to the data line **90**. Meanwhile, the other electrode of the capacitive element is connected to the correction line **110**. A gate of the sense TFT **40** is connected to the scan line **80**, and a drain D**3** is connected to the sense line **100**, and a source S**3** is connected to an anode of the OLED **10**.

[0030] The OLED **10** is a light-emitting element that emits light with luminescence corresponding to a voltage applied across the anode and the cathode, or a current flowing across the anode and the cathode. The drive TFT **20** is a transistor for driving the OLED **10** for light emission. The selection TFT **21** is a transistor for selecting a sub-pixel to be driven for light emission. The sense TFT **40** is a transistor for detecting the degradation of the OLED **10**.

[0031] The power line **60** is a wire provided for supplying electric power to a sub-pixel circuit. The earth line **70** is a wire for grounding circuit elements contained in the sub-pixel circuit. The scan line **80** is a wire for selecting a sub-pixel. Supplying the scan line **80** with a selection voltage that activates the selection TFT **30** allows the selection of a sub-pixel to be driven for light emission. The data line **90** is a wire for supplying data (voltage) to the OLED **10**. The luminescence of the OLED **10** is controlled by the level of this voltage. The sense line **100** is a wire for detecting voltage variation caused by degradation in the OLED **10** and, in cooperation with the sense TFT **40**, detects variation in anode voltage of the OLED **10**. The correction line **110** is a wire for correcting (compensating) voltage variation to cause the OLED **10** to emit with the same

luminescence under variation of the anode voltage of the OLED **10** required for light emission with a predetermined luminescence.

[0032] When a voltage is applied to the scan line **80** and to the gate of the selection TFT **30**, the selection TFT **30** becomes activated, causing a data signal (voltage) applied to the data line **90** to be applied to the gate (point A) of the drive TFT **20**. This results in a predetermined level of current flowing to the OLED **10**, causing the OLED **10** to emit light with luminescence corresponding to the data signal (voltage). When no voltage is present in the scan line **80**, the selection TFT **30** becomes deactivated, but the gate voltage (point A) of the drive TFT **20** is maintained at a constant level by the capacitive element **50** until a scan voltage is applied again.

[0033] A voltage of the sense line **100** is pre-charged at a level corresponding to an anode voltage that occurs when a predetermined level of current flows through the OLED **10**. When a voltage is applied to the scan line **80** and to the gate of the selection TFT **30** and the sense TFT **40**, a voltage is applied to a gate of the drive TFT **20**, causing a predetermined level of current corresponding to the data signal (voltage) to begin to flow through the OLED **10**. At this time, the sense TFT **40** is in the activated state, resulting in a comparison between anode voltage of the OLED **10** and voltage of the pre-charged sense line **100**. If the anode voltage is higher than the voltage of the sense line **100**, a current flows into the sense line **100**. If lower, a current flows out of the sense line **100**. A determination as to which one of these two states occurs will be made by the detection of a voltage variation in the sense line **100**.

[0034] In FIG. **3**(*b*), the drain D**1** of the drive TFT **20** is connected to the power line **60**, and the source S**1** is connected to an anode of the OLED **10**. A cathode of the OLED **10** is connected to the earth line **70**. A gate of the drive TFT **20** is connected to one electrode of a capacitive element **51** and the drain D**2** of the selection TFT **30**. A gate of the selection TFT **30** is connected to the scan line **80**, and the source S**2** is connected to the data line **90**. The other electrode of the capacitive element **51** is connected to an anode of the OLED **10**. Meanwhile, one electrode of the capacitive element **50** is connected to the anode of the OLED **10**, and the other electrode is connected to the correction line **110**. A gate of the sense TFT **40** is connected to the scan line **80**, and a drain D**3** is connected to the sense line **100**, and a source S**3** is connected to the anode of the OLED **10**.

[0035] When a voltage is applied to the scan line **80** and to the gate of the selection TFT **30**, the selection TFT **30** becomes activated, causing a data signal (voltage) applied to the data line **90** to be applied to the gate (point A) of the drive TFT **20**. This results in a predetermined level of current flowing to the OLED **10**, causing the OLED **10** to emit light with luminescence corresponding to the data signal (voltage). When no voltage is present in the scan line **80**, the selection TFT **30** becomes deactivated, but the gate voltage (point A) of the drive TFT **20** is maintained at a constant level by the capacitive elements **50**, **51** until a scan voltage is applied again. The difference from the second embodiment of FIG. **3**(*a*) lies in the use of the two capacitive elements **50**, **51** connected in series. In other words, the difference is that, when a predetermined level of current begins to flow through the OLED **10**, a voltage is applied to the anode of the OLED **10**, which causes the capacitive element **51** to act to maintain a voltage between the gate and source (anode of the OLED) of the drive TFT, thereby automatically correcting a variation in threshold of the drive TFT **20**.

[0036] As is the case with the embodiment of FIG. **3**(*a*), the voltage of the sense line **100** is pre-charged at a level corresponding to an anode voltage that occurs when a predetermined level of current flows through the OLED **10**. When a voltage is applied to the scan line **80** and to the gate of the selection TFT **30** and the sense TFT **40**, a voltage is applied to a gate of the drive TFT **20**, causing a predetermined level of current corresponding to the data signal (voltage) to begin to flow through the OLED **10**. At this time, the sense TFT **20** is in the activated state, resulting in a comparison between anode voltage of the OLED **10** and voltage of the pre-charged sense line **100**. If the anode voltage is higher than the voltage of the sense line **100**, a current flows into the sense line **100**. If lower, a current flows out of the sense line **100**. A determination as to which one of these two states occurs will be made by the detection of a voltage variation in the sense line **100**.

[0037] Degradation in emission intensity of the OLED **10** caused by its deterioration usually results in increased resistance, which tends to cause a voltage required for passing a predetermined level of current through the OLED **10** to become high. For this reason, the OLED **10**, if deteriorated, tends to cause the anode voltage of the OLED **100** to become higher than the pre-charge voltage of the sense line **100**. If this occurs, a desired level of emission intensity cannot be obtained even if a predetermined level of current is passed through the OLED **10** (namely, degradation in emission intensity).

[0038] FIGS. **3**(*a*) and (*b*) show means for correcting degradation in emission intensity by applying a correction voltage to the correction line **110**. As shown in FIG. **4**, application of the correction voltage following the completion of the scan voltage application increases the gate voltage (point A) of the drive TFT **20** by a degree of the correction voltage, which causes a level of current flowing through the OLED **10** to be increased or reduced by a degree corresponding to the correction voltage. The correction voltage is set according to the degree of deterioration of the OLED **10**, thereby allowing a predetermined level of emission intensity to be maintained despite the deterioration of the OLED **10**.

[0039] Meanwhile, FIGS. **3**(*c*) and (*d*) show that adding the correction voltage to a voltage applied to the gate (point A) of the drive TFT **20** increases or reduces a level of current flowing through the OLED **10** by a degree corresponding to the correction voltage.

Second Embodiment

[0040] FIG. **5** is a diagram showing a sub-pixel circuit of a light-emitting display unit according to a second embodiment of the present invention. In the second embodiment, one sub-pixel is composed of three p-channel TFTs **21**, **31**, **42**, one or two capacitive elements (capacitors) **51**, **52**, and one OLED **11**, which are connected to a scan line **81**, a data line **91**, a power line **61**, a correction line **111**, and an earth line **71**.

[0041] FIG. **6** is a schematic diagram showing a voltage application in a sub-pixel circuit of FIG. **5** as time passes. "Point A" of FIG. **6** corresponds to "Point A" in a wire

connected to a gate of the drive TFT **21** of FIG. **5**, showing a gate voltage of the drive TFT **21** as time passes.

[0042] In FIG. **5**(*a*), a source S**4** of the drive TFT **21** is connected to the earth line **71**, and a drain D**4** is connected to an anode of the OLED **11**. A cathode of the OLED **11** is connected to the power line **61**. A gate of the drive TFT **21** is connected to one electrode of the capacitive element **52** and a source S**6** of the selection TFT **31**. A gate of the selection TFT **31** is connected to the scan line **81** and a drain D**6** is connected to the data line **91**. Meanwhile, the other electrode of the capacitive element **52** is connected to the correction line **111**. The gate of the sense TFT **41** is connected to the scan line **81**, a source S**5** is connected to the sense line **101**, and a drain D**5** is connected to an anode of the OLED **11**.

[0043] When a voltage is applied to the scan line **81** and to the gate of the selection TFT **31**, the selection TFT **31** becomes activated, causing a data signal (voltage) applied to the data line **91** to be applied to the gate (point A) of the drive TFT **21**. This results in a predetermined level of current flowing to the OLED **11**, causing the OLED **11** to emit light with luminescence corresponding to the data signal (voltage). When no voltage is present in the scan line **81**, the selection TFT **31** becomes deactivated, but the gate voltage (point A) of the drive TFT **21** is maintained at a constant level by the capacitive element **52** until a scan voltage is applied again.

[0044] A voltage of the sense line **101** is pre-charged at a level corresponding to an anode voltage that occurs when a predetermined level of current flows through the OLED **11**. When a voltage is applied to the scan line **81** and to the gate of the selection TFT **31** and the sense TFT **41**, a voltage is applied to a gate of the drive TFT **21**, causing a predetermined level of current corresponding to the data signal (voltage) to begin to flow through the OLED **11**. At this time, the sense TFT **41** is in the activated state, resulting in a comparison between anode voltage of the OLED **11** and voltage of the pre-charged sense line **101**. If the anode voltage is higher than the voltage of the sense line **101**, a current flows into the sense line **100**. If lower, a current flows out of the sense line **100**. A determination as to which one of these two states occurs will be made by the detection of a voltage variation in the sense line **100**.

[0045] In FIG. **5**(*b*), a source S**4** of the drive TFT **21** is connected to the earth line **71**, and a drain D**4** is connected to an anode of the OLED **11**. A cathode of the OLED **11** is connected to the power line **61**. A gate of the drive TFT **21** is connected to one electrode of the capacitive element **53** and a source S**6** of the selection TFT **31**. A gate of the selection TFT **31** is connected to the scan line **81** and a drain D**6** is connected to the data line **91**. The other electrode of the capacitive element **53** is connected to the anode of the OLED **11**. Meanwhile, one electrode of the capacitive element **52** is connected to the anode of the OLED **11**, and the other electrode is connected to the correction line **111**. An electrode of the sense TFT **41** is connected to the scan line **81**, a source S**5** is connected to the sense line **101**, and a drain D**5** is connected to an anode of the OLED **11**.

[0046] When a voltage is applied to the scan line **81** and to the gate of the selection TFT **31**, the selection TFT **31** becomes activated, causing a data signal (voltage) applied to the data line **91** to be applied to the gate (point A) of the drive TFT **21**. This results in a predetermined level of current flowing to the OLED **11**, causing the OLED **11** to emit light with luminescence corresponding to the data signal (voltage). When no voltage is present in the scan line **81**, the selection TFT **31** becomes deactivated, but the gate voltage (point A) of the drive TFT **21** is maintained at a constant level by the capacitive elements **52**, **53** until a scan voltage is applied again. The difference from the embodiment of FIG. **5**(*a*) includes the use of the two capacitive elements **52**, **53**. In other words, the difference is that, when a predetermined level of current begins to flow through the OLED **11**, a voltage is applied to the anode of the OLED **11**, which causes the capacitive element **53** to act to maintain a voltage between the gate and drain (anode of the OLED **11**) of the drive TFT **21**, thereby automatically correcting a variation in threshold of the drive TFT **21**.

[0047] As is the case with the embodiment of FIG. **5**(*a*), the voltage of the sense line **101** is pre-charged at a level corresponding to an anode voltage that occurs when a predetermined level of current flows through the OLED. When a voltage is applied to the scan line **81** and to the gate of the selection TFT **21** and the sense TFT **41**, a voltage is applied to a gate of the drive TFT **21**, causing a predetermined level of current corresponding to the data signal (voltage) to begin to flow through the OLED. At this time, the sense TFT **10** is in the activated state, resulting in a comparison between the anode voltage of the OLED **11** and voltage of the pre-charged sense line **101**. If the anode voltage is higher than the voltage of the sense line **101**, a current flows into the sense line **101**. If lower, a current flows out of the sense line **101**. A determination as to which one of these two states occurs will be made by the detection of a voltage variation in the sense line **101**.

[0048] Degradation in emission intensity of the OLED **11** caused by to its deterioration usually results in increased resistance which tends to cause a voltage required for passing a predetermined level of current through the OLED **11** to become high. For this reason, the OLED **11**, if deteriorated, tends to cause the anode voltage of the OLED **11** to become higher than the pre-charge voltage of the sense line **101**. If this occurs, a desired level of emission intensity cannot be obtained even if a predetermined level of current is passed through the OLED **11** (namely, degradation in emission intensity).

[0049] The second embodiment (FIGS. **5**(*a*) and (*b*)) provides means for correcting degradation in emission intensity by applying a correction voltage to the correction line. As shown in FIG. **6**, application of the correction voltage following the completion of the scan voltage application increases the gate voltage (point A) of the drive TFT **21** by a degree of the correction voltage, which causes a level of current flowing through the OLED **11** to be increased by a degree corresponding to the correction voltage. The correction voltage is set according to the degree of deterioration of the OLED **11**, thereby allowing a predetermined level of emission intensity to be maintained despite the deterioration of the OLED **11**.

Third Embodiment

[0050] FIG. **7** is a diagram showing a sensing section **160** connected to the sense line **100** of the above mentioned sub-pixel circuit. The sub-pixel circuit shown in FIG. **7** is the same as the circuit shown in FIG. **3**, except for the sensing section. For this reason, the same components have the same numerals and symbols in these figures, and repeated descriptions of the same components are omitted.

[0051] In the sub-pixel circuit shown in FIG. **7**, a voltage set by a pre-charge power supply **140** is applied in advance to the sense line **100** and one terminal (inverted terminal of FIG. **7**) of a comparator **120** (pre-charged state), in order to measure an anode voltage of the OLED **10**. Such a pre-charged state is shown at the lower right of FIG. **7** where a switch **131** is on and a switch **130** is off and the voltage set by the pre-charge power supply **140** is applied to the inverted terminal of the comparator **120**.

[0052] Next, when the application of a voltage to the scan line **100** brings the selection TFT **20** and the sense TFT **40** into an activated state, the sense line **100** and the anode of the OLED **10** are electrically connected. At this time, the switch **130** is on and the switch **131** is off, as shown at the lower left of FIG. **7**. If the anode voltage of the OLED **10** is lower than the pre-charge voltage, the potential of the sense line **100** goes down slightly, causing a low voltage to be output from the comparator **120** through the process of a comparison in potential between both terminals of the comparator **120**. On the contrary, if the anode voltage of the OLED **10** is higher than the pre-charge voltage, the potential of the sense line **100** goes up slightly, causing a high voltage to be output from the comparator **120** through the process of a comparison in potential between both terminals of the comparator **120**.

[0053] FIG. **8** is a diagram showing a configuration of a sensing section **161** that is different from that of FIG. **7**. The sensing section **161** is the same as that of FIG. **7** in that the switch **130** is connected to the non-inverted terminal of the comparator **120**, but is different from that of FIG. **7** in that a capacitive element **150** and a switch **132** as well as the pre-charge power supply **140** and a switch **133** are connected to the inverted terminal. The switch **132** and the switch **133** are configured to work together. Other configurations are the same as those of FIG. **7**. For this reason, the same components have the same numerals and symbols, and repeated descriptions of the same components are omitted.

[0054] In the sensing section **161** having these configurations, when pre-charging takes place, the switch **130** becomes off and the switches **132**, **133** become on, causing a voltage set by the pre-charge power supply **140** to be connected to the inverted terminal of the comparator **120**, as shown in the lower right of FIG. **8**. This results in such a pre-charge voltage being maintained by the capacitive element **150**.

[0055] When sensing takes place, the sensing section **161** is switched to a state indicated in the lower left of FIG. **8**. In other words, both of the switches **132**, **133** are off and the switch **130** is on. In conjunction with this, a voltage is applied to the scan line **80**, causing the selection TFT **30** and the sense TFT **40** to become on. This results in a voltage applied to the data line **90** being applied to the anode of the OLED **10** through the drive TFT **20**. At that time, the sense TFT **40** is on and the sense line **100** is charged at a pre-charge voltage set by the pre-charge power supply **140**, causing the anode voltage of the OLED **10** to be input to the non-inverted terminal of the comparator **120** through the sense line **100** for comparison with the pre-charge voltage. If the anode voltage of the OLED **10** is higher than the pre-charge voltage, a high level voltage signal is output from the comparator **120**, thereby causing detection of a rise of the anode voltage of the OLED **10**.

[0056] As described above, the sensing section **161** may have a configuration shown in FIG. **8**. In addition, the sensing sections **160**, **161** are not limited to these embodiments, and may have other configurations so long as they are capable of detecting a variation in anode voltage of the OLED **10**.

[0057] FIG. **9** is a graph showing an example of OLED **10** degradation characteristics. The OLED **10** typically has degradation characteristics shown in FIG. **9**. In other words, the OLED **10** suffers from degradation in luminescence with an increase in application voltage as time passes during constant-current operation (at 1 mA/cm^2). In a sub-pixel circuit according to the third embodiment, luminescence correction is performed by the measurement of such an increase in application voltage. Even if degradation in the OLED **10** results in an increase in application voltage, the luminescence can be maintained at a constant level by making corrections to increase the application voltage corresponding to such an increase.

[0058] FIG. **10** is an example of a look-up table showing OLED application voltage versus luminescence characteristics and drive TFT application voltage versus drive current characteristics. The OLED **10**, for example, has application voltage versus luminescence characteristics shown in FIG. **10**(*a*).

[0059] In addition, the drive TFT **20** has gate voltage (Vg) versus drain current (Ig) characteristics (for a constant drain voltage) shown in FIG. **10**(*b*).

[0060] For example, in order to operate the OLED **10** at a drive current of about 1 mA/cm^2 with luminescence of about 1000 cd/m^2, pre-charging is carried out with anode voltage corresponding to 1,000 cd/m^2 set to 5.90 V and a pre-charge voltage set to 5.90 V, referencing FIG. **10**(*b*). For the drive TFT **20**, a gate voltage is set to 0.24 V to supply a drive current of about 1 mA/cm^2, referencing FIG. **10**(*b*). If a high signal is output from the comparator **120** at the first scanning, the pre-charge voltage is lower than the anode voltage of the OLED **10**, although about 1 mA/cm^2 flows through the OLED **10**. Accordingly, the pre-charge voltage is increased by one step (+0.02 V in this case) for the second scanning. If the output from the comparator **120** becomes low for the first time after these repeated operations (or after 18 repeated operations in this case), the OLED **10** is projected to have an increase in anode voltage of about 6% with a decrease in luminescence of about 20% (from FIG. **9**).

[0061] As described above, if a variation in anode voltage of the OLED **10** detected via the sense line **100** is in the positive direction (or on the upward trend), the pre-charge voltage may be likewise changed by one step in the positive direction (on the upward trend), thereby detecting the variation in anode voltage of the OLED **10** using the sense line **100** again. The number of steps required for voltage correction can be determined by repeating the above operation until the voltage variation is inverted in the negative direction (or on the downward trend), thereby allowing luminescence correction (or luminous intensity correction) based on proper voltage corrections. Although a voltage variation in the positive direction or on the upward trend is described in this example, the same operation can also be performed for cases where a voltage variation is in the negative direction or on the downward trend. In other words, the pre-charge voltage is changed by the proper number of steps in the negative direction corresponding to the voltage variation of the OLED **10**, thereby allowing luminescence correction (or luminous intensity correction) based on proper voltage corrections.

[0062] There are two methods for compensating for the decrease in luminescence. One of the methods can be accomplished by changing gate voltage settings of the drive TFT from 0.24 V to 0.28 V. As shown in FIG. **10**(*b*), changing the gate voltage to 0.28 V increases the current Id to be supplied to the OLED **10** by about 20%. This can be accomplished by updating the look-up table of FIG. **10**(*b*). The second method can be accomplished by applying +0.4 V to the correction line **110** following pixel scanning to increase the gate voltage of the drive TFT **20** through the capacitive element **50**. In this case, the look-up table for the drive TFT **20** does not need to be updated.

[0063] The look-up table may be stored in a predetermined storage element, such as nonvolatile memory or ROM (read only memory). Data, pre-charge voltages, or correction voltages corresponding to a predetermined luminescence may be determined by referencing the look-up table stored in such a storage element.

[0064] Also, there is a method for mathematically calculating application voltages without using the look-up table. FIG. **10**(*b*) shows an example of values obtained using mathematical models. Such mathematical models allow a mathematical calculation of a predetermined application voltage. The mathematical models can be stored in a predetermined storage element, such as ROM or RAM. Data, pre-charge voltages, or correction voltages corresponding to a predetermined luminescence may be calculated by referencing the mathematical models stored in such a storage element.

[0065] A light-emitting display panel sub-pixel circuit and its drive method described in the embodiments 1 through 3 can be applied to a display panel and display unit employing such a sub-pixel circuit and its drive method. A light-emitting display panel can be configured by arranging in matrix a plurality of pixels each having a light-emitting display panel sub-pixel circuit. In addition, a light-emitting display unit or light-emitting display system can be configured using an image processing circuit, a control circuit, and an enclosure.

[0066] Typical configurations of the present invention are described with reference to, but not limited to, the foregoing preferred embodiments. Various modifications are conceivable within the scope of the present invention.

CITATION LIST

Patent Literature

[0067] PTL 1: Japanese Patent No. 3743387
[0068] PTL 2: Japanese Patent No. 4240059
[0069] PTL 3: Japanese Patent No. 3613253

Non Patent Literature

[0070] NPL 1: IDW 2001, Proceedings page 315

PARTS LIST

[0071] **10**, **11** OLED
[0072] **20**, **21** Drive TFT
[0073] **30**, **31** Selection TFT
[0074] **40**, **41** Sense TFT
[0075] **50-53**, **150** Capacitive elements (capacitor)
[0076] **60**, **61** Power line
[0077] **70**, **71** Earth line
[0078] **80**, **81** Scan line
[0079] **90**, **91** Data line
[0080] **100**, **101** Sense line
[0081] **110**, **111** Correction line
[0082] **120** Comparator
[0083] **130-133** Switch
[0084] **140** Pre-charge power source
[0085] **160**, **161** Sensing section

1.-**28**. (canceled)

29. A light-emitting display panel sub-pixel circuit, comprising:
- a power line and an earth line;
- at least one light-emitting element connected in series with a drive transistor between the power line and the earth line;
- a data line for applying a data voltage, indicative of data, to a control electrode of the drive transistor so as to selectively operate the drive transistor and draw current through the light-emitting element to cause light transmission;
- a sense line for detecting voltage variation across the light-emitting element caused by degradation in the light-emitting element;
- at least one capacitive element connected to the control electrode of the drive transistor to apply a correcting voltage to the control electrode to compensate for the degradation; and
- a scan line for selecting a sub-pixel for light emission;
- wherein the data corresponding to a predetermined luminous intensity are programmed on the basis of a voltage.

30. The light-emitting display panel sub-pixel circuit according to claim **29**, wherein the power line further includes a correction line.

31. The light-emitting display panel sub-pixel circuit according to claim **30**, further comprising
- a selection transistor for selecting a sub-pixel for light emission, and
- a sense transistor for detecting degradation in the light-emitting element;
- wherein an anode of the light-emitting element is connected to a first main electrode of the drive transistor and the sense transistor;
- wherein a second main electrode of the sense transistor is connected to the sense line;
- wherein a first main electrode of the selection transistor is connected to the data line and a second main electrode is connected to a control electrode of the drive transistor; and
- wherein a control electrode of the selection transistor and the sense transistor are connected to the scan line.

32. The light-emitting display panel sub-pixel circuit according to claim **31**, wherein the control electrode of the drive transistor and the second main electrode of the selection transistor are connected to the correction line through the at least one capacitive element.

33. The light-emitting display panel sub-pixel circuit according to claim **32**,
- wherein each of the drive transistor, the selection transistor, and the sense transistor is an n-channel field effect transistor;
- wherein the first main electrode is a source electrode;
- wherein the second main electrode is a drain electrode; and
- wherein the control electrode is a gate electrode.

34. The light-emitting display panel sub-pixel circuit according to claim **31**, wherein each of the drive transistor, the selection transistor, and the sense transistor is a field effect transistor which includes an active layer composed mainly of a silicon, metallic oxide, or organic matter.

35. The light-emitting display panel sub-pixel circuit according to claim **31** wherein each of the drive transistor, the selection transistor, and the sense transistor is an n-channel field effect transistor.

36. The light-emitting display panel sub-pixel circuit according to claim **31**, wherein each of the drive transistor, the selection transistor, and the sense transistor is a p-channel field effect transistor.

37. The light-emitting display panel sub-pixel circuit according to claim **30**, wherein a cathode of the light-emitting element is grounded and a drain electrode of the drive transistor is connected to the power line.

38. The light-emitting display panel sub-pixel circuit according to claim **37**, wherein the correction line is grounded.

39. The light-emitting display panel sub-pixel circuit according to claim **37**,

wherein a gate electrode of the drive transistor and a drain electrode of the selection transistor are connected to the correction line through first and second capacitive elements;

wherein the first capacitive element is connected between the correction line and the source electrode of the sense transistor; and

wherein the second capacitive element is connected between a gate electrode of the drive transistor and a drain electrode of the selection transistor and a source electrode of the sense transistor.

40. The light-emitting display panel sub-pixel circuit according to claim **35**,

wherein each of the drive transistor, the selection transistor, and the sense transistor is a p-channel field effect transistor;

wherein the first main electrode is a drain electrode;

wherein the second main electrode is a source electrode; and

wherein the control electrode is a gate electrode.

41. The light-emitting display panel sub-pixel circuit according to claim **40**, wherein a cathode of the light-emitting element is connected to the power line, and a source electrode of the drive transistor is grounded.

42. The light-emitting display panel sub-pixel circuit according to claim **40**, wherein a gate electrode of the drive transistor and a source electrode of the selection transistor are connected the correction line through first and second capacitive elements;

wherein the first capacitive element is connected between the correction line and the drain electrode of the sense transistor; and

wherein the second capacitive element is connected between a gate electrode of the drive transistor and a source electrode of the selection transistor and a drain electrode of the sense transistor.

43. A method for driving a light-emitting display panel sub-pixel comprising the light-emitting display panel sub-pixel circuit according to claim **31**, comprising:

pre-charging the sense line of the light-emitting display panel sub-pixel circuit at a predetermined pre-charge voltage; and

detecting a voltage variation in the sense line which occurs when the sense transistor becomes on at the time of a sub-pixel selection.

44. The method according to claim **43**, wherein, if the voltage variation in the sense line is found to be in a positive or negative direction, changing the pre-charge voltage by one predetermined step in the same direction as the positive or negative direction, and detecting the voltage variation again.

45. The method according to claim **44**, further comprising repeating the changing and detecting steps until the detected voltage variation is inverted in the direction opposite the positive or negative direction.

46. The method according to claim **43**, wherein luminous intensity of the light-emitting element is corrected by applying a correction voltage to the correction line.

47. The method according to claim **43**, wherein luminous intensity of the light-emitting element is corrected by additionally applying a correction voltage to a gate electrode of the drive TFT.

48. The method according to claim **46**, wherein the correction voltage is set on the basis of a step width corresponding to the voltage variation in the sense line.

* * * * *

专利名称(译)	高分辨率OLED显示操作电路		
公开(公告)号	US20170084229A1	公开(公告)日	2017-03-23
申请号	US15/312377	申请日	2015-05-19
[标]申请(专利权)人(译)	联邦科学和工业研究组织		
申请(专利权)人(译)	联邦科学与工业研究组织		
当前申请(专利权)人(译)	联邦科学与工业研究组织		
[标]发明人	HIRAI TADAHIKO UENO KAZUNORI		
发明人	HIRAI, TADAHIKO UENO, KAZUNORI		
IPC分类号	G09G3/3283 G09G5/10		
CPC分类号	G09G3/3283 G09G5/10 G09G2300/0842 G09G2300/0819 G09G2300/043 G09G3/30 G09G3/3241		
优先权	2014901852 2014-05-19 AU		
外部链接	Espacenet USPTO		

摘要(译)
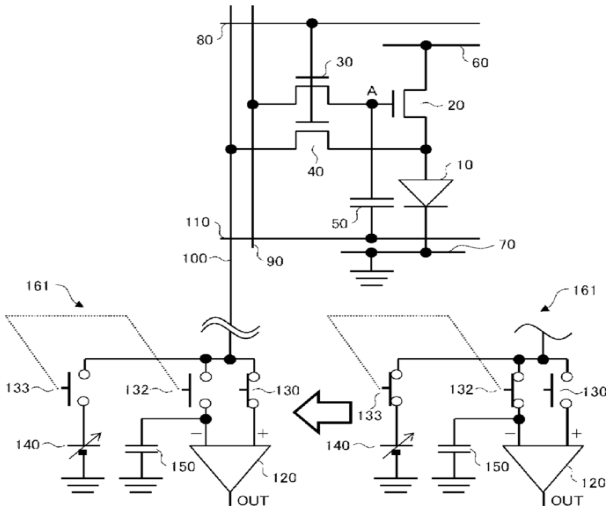
一种发光显示面板子像素电路，包括：至少三个开关;至少一个电容元件;至少一个发光元件;电源线，用作连接至少三个开关，至少一个电容元件和至少一个发光元件的导线;地球线;用于选择用于发光的子像素的扫描线;用于向发光元件提供数据的数据线;以及用于检测发光元件的劣化的感测线，其中，基于电压对与预定发光强度对应的数据进行编程。